Wall

AR300-IASY/D-HO/HO-K40-LOH/LOH

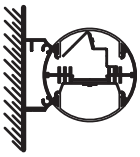

High Output - Up / High Output - Down
Indirect Asymmetric / Direct

LED Optimized High Transmittance Lens - Up & Down

Catalog Number: AR300-IASY/D-HO/HO-K40-80-4'-X-LOH/LOH-120
Report Number: #LLIA000956-002.ies
Luminaire Description: Extruded Aluminum Housing with White Aluminum Reflector and LED Optimized Acrylic Lenses Up & Down
LED Module: Multiple White Low-Power Light Emitting Diodes (LEDs) in a precise layout.

Total Luminaire Efficacy = 124.8 Lm/W
43% Up 57% Down
Color Rendering Index (CRI) = 84

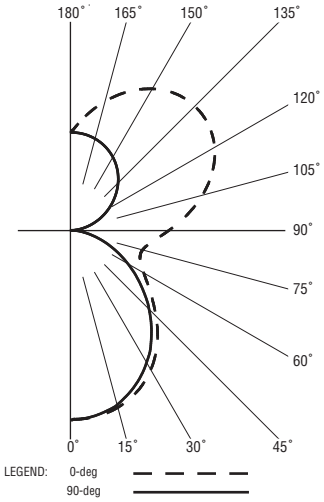

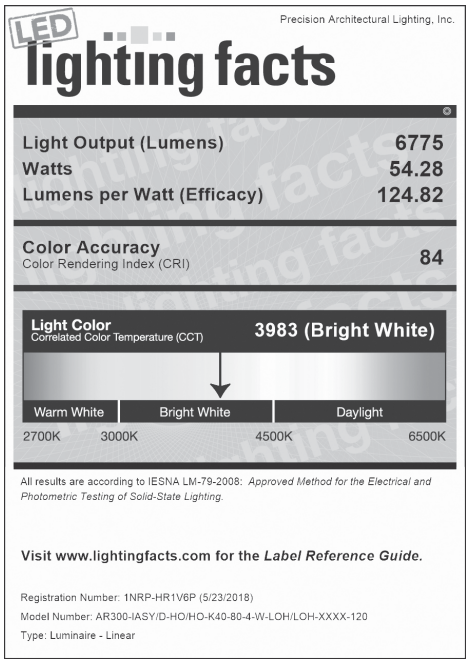

ZONAL LUMEN SUMMARY

Zone	Lumens	%Fixture
0- 30	1048	15.5
0- 40	1689	24.9
0- 60	2857	42.2
0- 90	3832	56.6
90- 180	2944	43.4
0- 180	6775	100.0

CANDELA DISTRIBUTION

	0.0	22.5	45.0	67.5	90.0
0	1372	1372	1372	1372	1372
5	1363	1372	1376	1361	1364
15	1319	1327	1324	1307	1304
25	1218	1225	1214	1183	1176
35	1056	1066	1049	1016	1002
45	844	851	843	805	790
55	654	646	619	587	567
65	540	513	445	383	356
75	534	482	352	218	173
85	631	558	366	146	39
90	708	626	410	160	1

AR300-IASY/D-MO/MO-K40-LOH/LOH

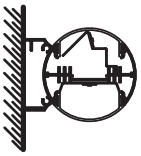

Medium Output - Up / Medium Output - Down
Indirect Asymmetric / Direct

LED Optimized High Transmittance Lens - Up & Down

Catalog Number: AR300-IASY/D-MO/MO-K40-80-4'-X-LOH/LOH-120
Report Number: #LLIA00096-001.ies
Luminaire Description: Extruded Aluminum Housing with White Aluminum Reflector and LED Optimized Acrylic Lenses Up & Down
LED Module: Multiple White Low-Power Light Emitting Diodes (LEDs) in a precise layout.

Total Luminaire Efficacy = 128.0 Lm/W
43% Up 57% Down
Color Rendering Index (CRI) = 84

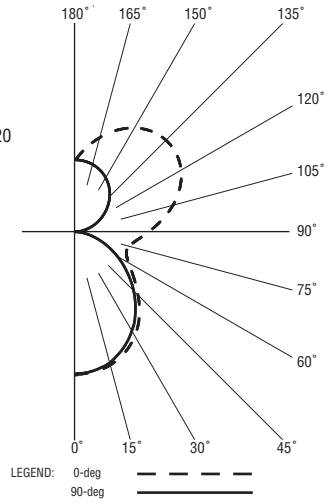

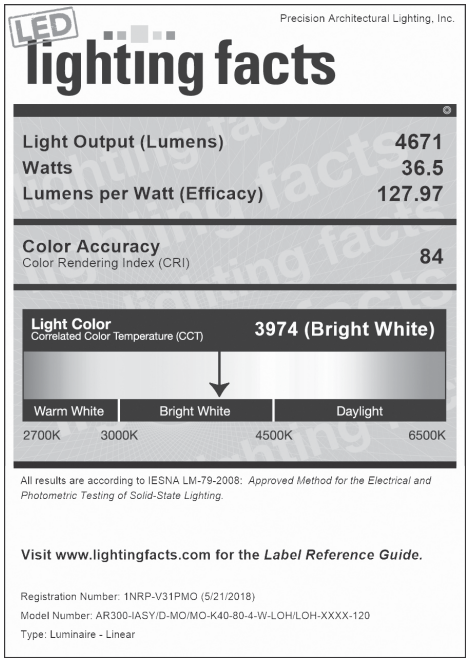

ZONAL LUMEN SUMMARY

Zone	Lumens	%Fixture
0- 30	728	15.6
0- 40	1173	25.1
0- 60	1984	42.5
0- 90	2662	57.0
90- 180	2008	43.0
0- 180	4671	100.0

CANDELA DISTRIBUTION

	0.0	22.5	45.0	67.5	90.0
0	952	952	952	952	952
5	945	952	954	944	947
15	914	919	918	906	906
25	842	847	841	820	817
35	729	736	725	704	696
45	581	586	582	558	549
55	450	445	427	406	394
65	372	353	307	264	248
75	369	333	243	150	120
85	437	386	253	101	27
90	487	431	282	110	1

For more information, visit our website at www.pal-lighting.com

Precision Architectural Lighting 4830 Timber Creek Drive Houston, Texas 77017
Tel 713.946.4343 Fax 713.946.4441 www.pal-lighting.com

Made in America